City of Pacific
Park Board Commission
MEETING AGENDA
Tuesday, May 18, 2021
6:30 p.m.

MEMBERS: Kate Hull-Pease, Chairperson; Jim Meier, Gina Lisak, Shawna Carey, Scott Newbold, Regina Ingram

MEMBERS ABSENT:

CITY STAFF: Jack Dodge, Community Development Manager
James Morgan, Public Works Manager
Alyssa Tatro, Associate Planner

Approve Meeting Minutes: April 20, 2021

Discussion Items:

1) Outdoor Fit Park Equipment – Guest Rob Paish with Outdoor-Fit to discuss

2) Discussion of Park Tour Results

3) Park Art – Piano Harp

4) Beaver Park Gate

5) Parks Maintenance Inspections

6) Adjourn

The next Regular Park Board Meeting is scheduled for Tuesday June 15, 2021 at 6:30 p.m.

City of Pacific Park Board
Minutes for April 20, 2021

Call to Order

Chairperson Hull-Pease called the Regular Meeting to order at 6:40PM

Attendance

Members Present: Chairperson; Kate Hull Pease, Gina Lisak, Shawna Carey, Scott Newbold, Ragina Ingram
Members Absent: Jim Meier

Member Newbold moved to excuse member Meier, seconded by member Lisak; motion approved unanimously.

Member Meier joined the meeting at 6:44

City Staff: Jack Dodge, Community Development Manager; Alyssa Tatro, Associate Planner; Jim Morgan, Public Works Manager; Nicole Schunke, Administrative Assistant

Guest: Mayor Leanne Guier

Approval of Park Board Minutes

The minutes were approved unanimously via Voice Vote

Approval of Agenda

Katie added an item (5) for a presentation by the Mayor, moving adjournment to item 6.

The amended agenda was approved unanimously.

Discussion items

1. Introduction of Ragina Ingram

Chairperson Kate asked Ragina Ingram to introduce herself to the park board.

2. Gate at Beaver Park

Mayor Guier, Jack Dodge, and Jim Morgan spoke about the kiss gate and the different types and styles of gates that can work at Beaver Park.

After discussion Park Board tabled the item for after the Park Board tour.

3. Recommended Park Improvements, Parks Board Priorities for 2021, Preliminary cost estimates

Sunset Park:
Jim Morgan will check in with Park Board in 90 days
Interurban Trail:
$5,000 for flashing lights
$3,000 way finding signs
Beaver Park:
Sod during the Fall
Elise Park:
Cost estimate by next meeting
Aspen Park:
Change the 3 trees from quaking aspen to red maples
Otter Park:
Sod during the Fall after Beaver Park

4. Parks Maintenance Inspections, refining summary sheet values

Park Board reviewed the maintenance inspections.

5. Mayor's Presentation

- Mayor Guier said that the Park Board might be able to do everything on their priorities list.
- Mayor Guier also mentioned that she has some Parks & Rec magazines for the Park Board to look at during their park tour.
- War Memorial on the Interurban Trail will be getting funding from the Port of Seattle. The Lions Club, The Veterans of Foreign Wars, and Four Culture are willing to help on the project as well.
- There is a donation of foliage (tree and bushes) has been offered to the Park Board; Park Board will take a look at them during the Park tour.

Adjourn

The meeting was adjourned at 7:44

Next meeting will take place on Tuesday, May 18, 2021 via Zoom Meeting

Minutes prepared by Nicole Schunke, Administrative Assistant

Meeting Minutes Approved

_____ _____

Kate Hull Pease, Commissioner Date

OUTDOOR-FIT
exercise systems
www.outdoor-fit.com

TAMPERPROOF.
WEATHERPROOF.
SAFE.

TAMPERPROOF FITNESS EQUIPMENT FOR PARKS & RECREATION

OUTDOOR-FIT exercise systems
1-877-760-6337 · info@outdoor-fit.com · www.outdoor-fit.com

ABOUT OUTDOOR-FIT EXERCISE SYSTEMS

Outdoor-Fit was started in 2003 by John Lewis. After taking his kids to the local playground and realizing that just sitting on the park bench was a waste of time, John thought that an outdoor fitness multigym located within view of the playground structure would allow adults to exercise while still watching over the kids.

After numerous prototypes, the first Helios multigym was developed for market and launched in the United States. This path to market was not easy because designing outdoor fitness equipment presents unique design challenges not found when creating indoor fitness equipment. Not only does outdoor fitness equipment need to deliver biomechanically correct exercises with durable construction like indoor fitness equipment; it also must be tamperproof, weatherproof, and safe to use in unsupervised environments.

By incorporating this design criteria, the Helios multigym became a hit across a wide range of outdoor markets. Helios units have been installed by Parks & Rec Departments, Correctional Facilities, Military Bases, Corporate Campuses, Campgrounds, and Home Owners Associations around the world.

Since the initial prototype, the Helios has stayed in the Outdoor-Fit product line with numerous changes and design improvements along the way. Outdoor-Fit now manufactures four different multigym models; the Apollo, Helios, Titan and Vulcan. Outdoor-Fit introduced its first cardio unit in 2018 with the revolutionary Everest Cardio Climber.

With fitness equipment experience dating back to the mid 1970's John and his team have developed a range of outdoor fitness equipment products that brings the best of indoor commercial fitness equipment to the outdoor world.

THE FIRST PROTOTYPE

FIRST HELIOS PRODUCTION UNIT

For Parks & Recreation

For Correctional Facilities

For Military Facilities

For Schools & Universities

For Campgrounds & RV Parks

For Resorts

For Corporate Campuses

OUR PRODUCTS

APOLLO MULTIGYM

5 Simultaneous Users
Our Flagship Product, Packed with Features

HELIOS MULTIGYM

4 Simultaneous Users
The Original MultiGym

VULCAN MULTIGYM

2 Simultaneous Users
Our Best Value Product

TITAN MULTIGYM

4 Simultaneous Users
No Moving Parts and a Small Footprint

EVEREST CARDIO CLIMBER

A Revolutionary,
Tamperproof Climber

BIOMECHANICALLY CORRECT, TAMPERPROOF FITNESS EQUIPMENT

We manufacture the world's greatest indoor/outdoor fitness equipment and multigyms.

We are trusted by hundreds of correctional facilities & park installations across North America to provide safe, effective and durable products.

APOLLO
MULTIGYM

With a proven history of durability and performance, the APOLLO is becoming a favorite of correctional facilities as well as busy outdoor fitness park installations.

The Quality of Commercial Gym Fitness Equipment

The APOLLO outdoor fitness multigym takes the basics of indoor commercial fitness equipment and delivers it to the outside world in a tamperproof, durable, and weatherproof package.

Compact, cost effective, and completely safe, the APOLLO is designed for any fitness level or ability.

TAMPERPROOF. WEATHERPROOF. SAFE.

POPULAR PULLEY STATION

The APOLLO features the popular high-low pulley station for a variety of standing or seated exercises. Our unique, tamperproof selectorized weight stack allows users to adjust weight between 10 and 100lbs. Locking safety features also eliminate pinch points or entrapment zones typically seen on selectorized weight stack systems.

16+ DIFFERENT EXERCISES

The APOLLO is designed with over 16 different exercises, offering a full body workout.

With adjustability where needed and our unique chin/dip assist mechanism, the APOLLO multigym is suitable for users of all fitness levels.

5 SIMULTANEOUS USERS

The APOLLO helps you make the most of your space, with up to five people using the equipment at once.

OUTDOOR-FIT exercise systems

1-877-760-6337 · info@outdoor-fit.com · www.outdoor-fit.com

The APOLLO is built to maximize indoor or outdoor exercise areas, with over 16 exercises available:

CHIN UP BAR
with assist function

HIGH PULLEY STATION
- Tricep Press Down
- Upper Back Pull Down
- & more

DIP STATION
with assist function

LOW PULLEY STATION
- Bicep Curl
- Upright Shoulder Row
- Back Seated Row
- & more

ABDOMINAL VERTICAL KNEE RAISE station

BACK EXTENSION BENCH
adjustable

CALF RAISE
station

PLYO BOX
- Step Ups
- Elevated Knee Touches
- Seated Crunches
- Box Jumps
- Bulgarian Squat
- Incline Push Ups
- & many more

TECHNICAL SPECIFICATIONS

Width: 73" / 185 cm

Length: 76" / 193 cm

Height: 85" / 216 cm

Weight: 1046 lbs / 475 kg

Weight Stack Weight: 100 lbs / 45 kg

Anchoring Requirements: 4 x concrete anchors with rated "pull out" or "tension" strength of 3400lbs or greater. Anchors must be secured into structural concrete.

Frame & Finish: Constructed of 3/16" and ¼" heavy duty steel that is zinc primed and polyester powder coated with UV stabilized color pigment. All fasteners are tamperproof stainless steel carriage bolts with the locking nuts on the inside of the padlocked center column.

Standard Color: Ultramarine Blue.
Custom colors available for an extra charge.

Shipping Weight: 1176 lbs / 534 kg

Shipping Dimensions: 48" wide x 72" long x 85" high / 122 cm wide x 183 cm long x 216 cm high

Number of Simultaneous Users: 5

CAD DRAWING

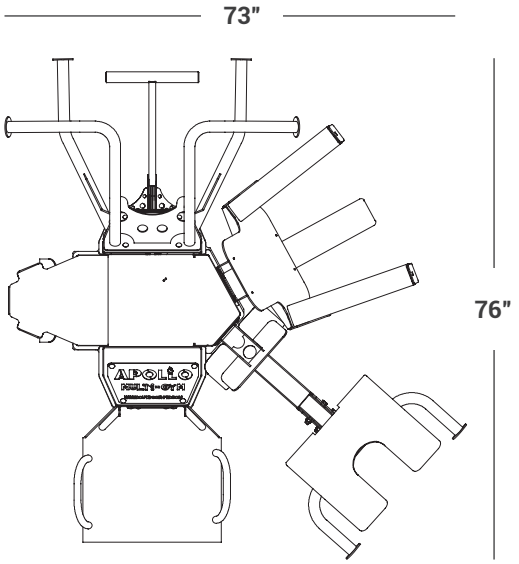

APOLLO MULTIGYM

HELIOS
MULTIGYM

The science of biomechanics, solid design, and tamperproof construction combine to bring you the HELIOS outdoor fitness multigym.

The Quality of Commercial Gym Fitness Equipment

The HELIOS outdoor multigym takes the basics of indoor fitness equipment and delivers it to the outside world in a tamperproof, durable and weatherproof package.

Compact, cost effective and completely safe, the HELIOS is designed for any fitness level or ability.

TAMPERPROOF. WEATHERPROOF. SAFE.

PROVEN TOUGH

The HELIOS has been proven tough in locations across North America and around the world. Installed in parks & playgrounds, correctional facilities, military bases, corporate campuses, and even on board military ships, the HELIOS has earned its reputation for strength, durability, and real exercise.

11+ DIFFERENT EXERCISES

The HELIOS is designed with over 11 different exercises, offering a full body workout.

With adjustability where needed and our unique chin/dip assist mechanism, the HELIOS multigym is suitable for users of all fitness levels.

4 SIMULTANEOUS USERS

The HELIOS helps make the most of your space, with up to four people using the equipment at once.

OUTDOOR-FIT exercise systems

1-877-760-6337 · info@outdoor-fit.com · www.outdoor-fit.com

The HELIOS is built to maximize indoor or outdoor exercise areas, with 11 exercises available:

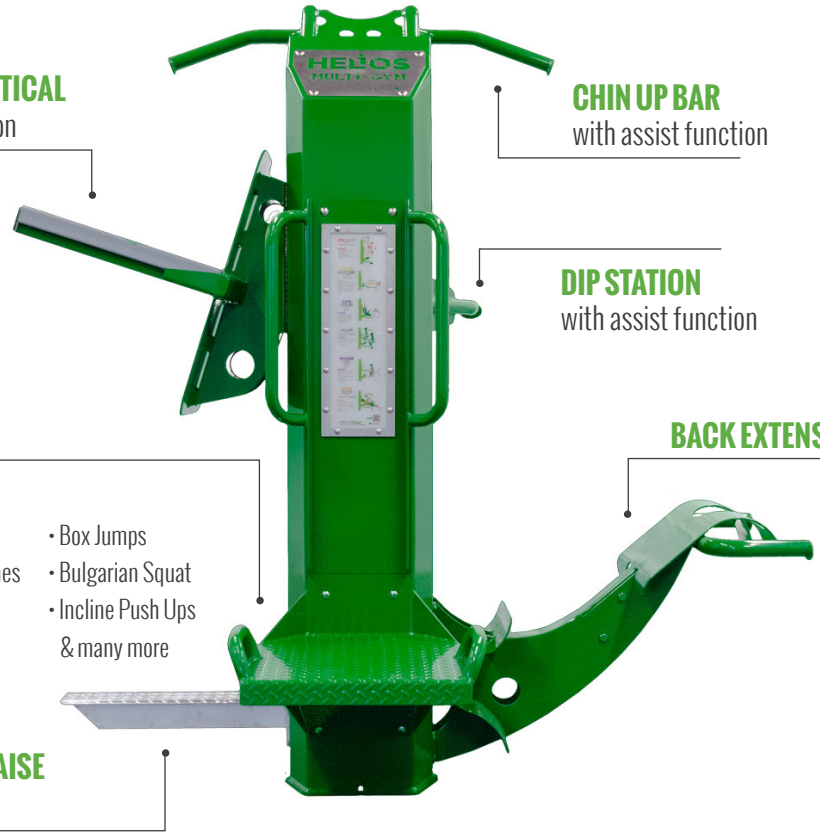

ABDOMINAL VERTICAL KNEE RAISE station

CHIN UP BAR with assist function

DIP STATION with assist function

BACK EXTENSION bench

PLYO BOX

- Step Ups
- Elevated Knee Touches
- Seated Crunches
- Box Jumps
- Bulgarian Squat
- Incline Push Ups

& many more

CALF RAISE station

TECHNICAL SPECIFICATIONS

Width: 80" / 204 cm
Height: 85" / 216 cm
Length: 65" / 166 cm
Weight: 620 lbs / 282 kg

Anchoring Requirements: 4 x concrete anchors with rated "pull out" or "tension" strength of 3400lbs or greater. Anchors must be secured into structural concrete.

Frame & Finish: Constructed of 3/16" and ¼" heavy duty steel that is zinc primed and polyester powder coated with UV stabilized color pigment. All fasteners are tamperproof stainless steel carriage bolts with the locking nuts on the inside of the padlocked center column.

Standard Color: Emerald Green.
Custom colors available for an extra charge.

Shipping Weight: 718 lbs / 326 kg

Shipping Dimensions: 48" wide x 48" long x 85" high / 122 cm wide x 122 cm long x 216 cm high

Number of Simultaneous Users: 4

CAD DRAWING

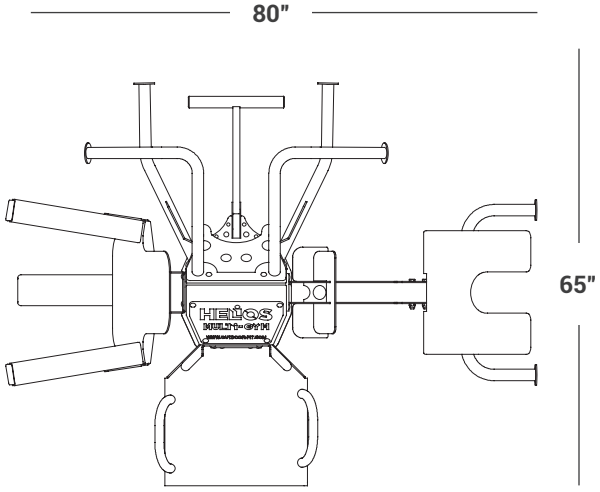

HELIOS MULTIGYM

TITAN MULTIGYM

With no moving parts, the TITAN bodyweight multigym is completely tamperproof and was specifically designed for safety and security.

The Quality of Commercial Gym Fitness Equipment

The TITAN outdoor fitness multigym takes the basics of indoor commercial fitness equipment and delivers it to the outside world in a tamperproof, durable, and weatherproof package.

Compact, cost effective, and completely safe, the TITAN is designed for any fitness level or ability.

TAMPERPROOF. WEATHERPROOF. SAFE.

COMPLETELY TAMPERPROOF

The TITAN has no moving parts, eliminating pinch points and entrapment areas. The TITAN's completely tamperproof design also means nothing can be removed from the unit.

5 DIFFERENT EXERCISES

The TITAN is designed with five different exercises, offering a full body workout. Its multigym design allows users to move around the equipment in a circuit training format.

4 SIMULTANEOUS USERS

The TITAN helps you make the most of your space, with up to four people using the equipment at once.

OUTDOOR-FIT exercise systems

1-877-760-6337 · info@outdoor-fit.com · www.outdoor-fit.com

The TITAN is built to maximize indoor or outdoor exercise areas, with 5 exercises available:

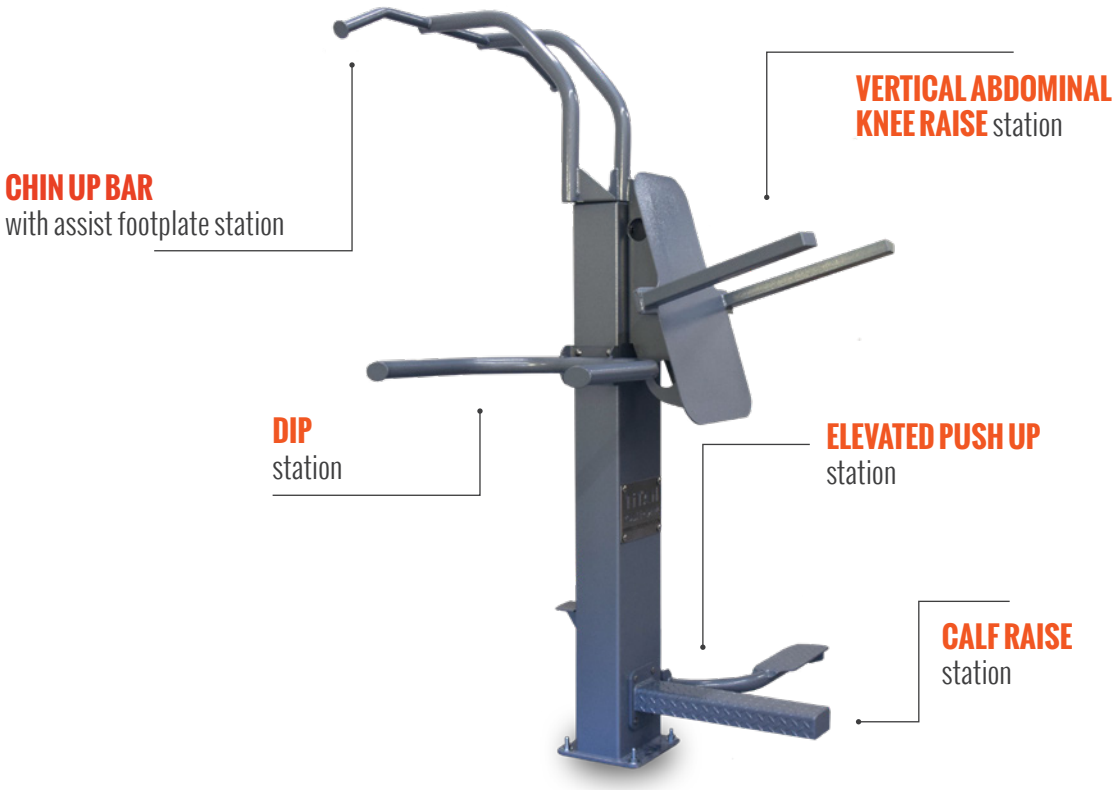

TECHNICAL SPECIFICATIONS

Width: 54" / 138 cm
Height: 85" /216 cm
Length: 57" / 145 cm
Weight: 253 lbs / 115 kg

Anchoring Requirements: 4 x concrete anchors with rated "pull out" or "tension" strength of 3400lbs or greater. Anchors must be secured into structural concrete.

Frame & Finish: Constructed of 3/16" and 1/4" heavy duty steel that is zinc primed and polyester powder coasted with UV stabilized color pigment. All fasteners are tamperproof stainless steel carriage bolts with the locking nuts on the inside of the padlocked center columns.

Standard Color: Silver Hammertone.
Custom colors available for an extra charge.

Shipping Weight: 358 lbs / 163 kg

Shipping Dimensions: 48" wide x 60" long x 30" high / 122 cm wide x 153 cm long x 77 cm high

Number of Simultaneous Users: 4

CAD DRAWING

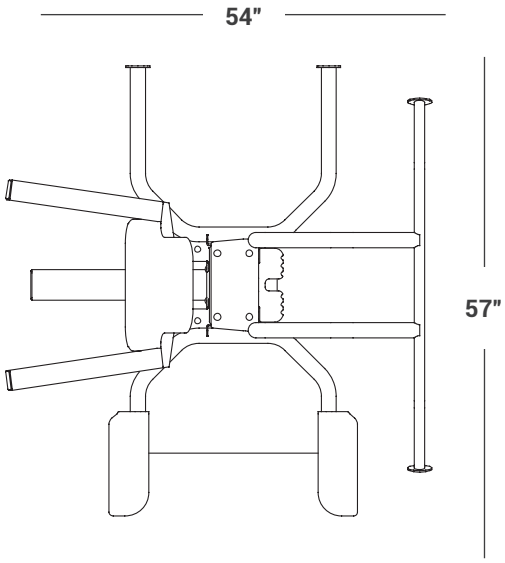

TITAN MULTIGYM

VULCAN
MULTIGYM

The VULCAN is an indoor/ outdoor fitness multigym that provides an upper body and core workout using a person's own bodyweight.

The Quality of Commercial Gym Fitness Equipment

The VULCAN outdoor fitness multigym takes the basics of indoor commercial fitness equipment and delivers it to the outside world in a tamperproof, durable, and weatherproof package.

Compact, cost effective, and completely safe, the VULCAN is designed for any fitness level or ability.

TAMPERPROOF. WEATHERPROOF. SAFE.

EXTREMELY SMALL FOOTPRINT

The VULCAN multigym only measures 44" W and 54" L, which helps you make the most of your space.

COMPLETELY TAMPERPROOF

Similar to the TITAN, the VULCAN has no moving parts, pinch points, or entrapment areas.

Nothing can be removed from the VULCAN making the unit completely tamperproof and safe.

GREAT VALUE

Despite being the smallest and least expensive model that Outdoor-Fit manufactures, the VULCAN still delivers on Outdoor-Fit's core values. Like all other models, the VULCAN delivers biomechanically correct exercises.

The VULCAN is built to maximize indoor or outdoor exercise areas, with over 3 exercises available:

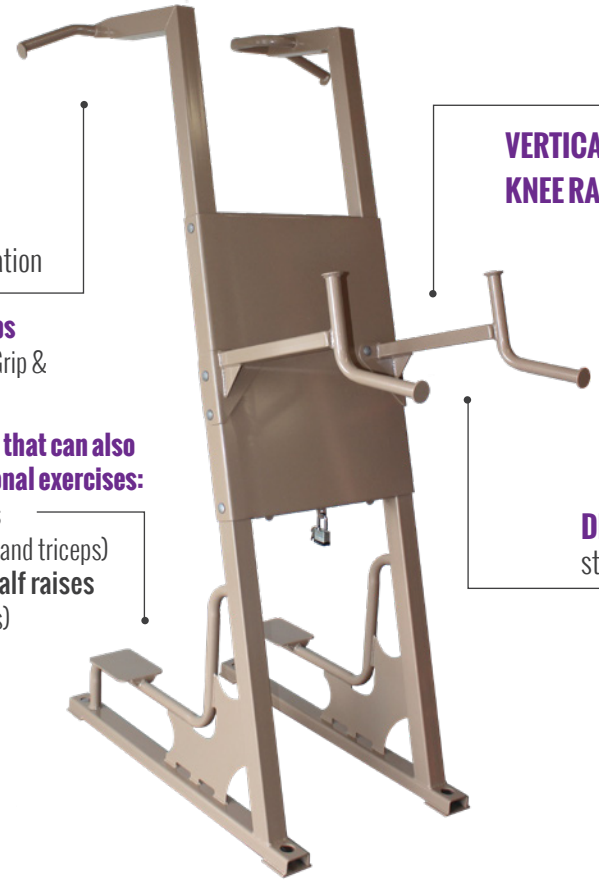

CHIN UP BAR
with assist footplate station

- **Multiple hand grips**
  (Wide Grip, Narrow Grip & Hammer Grip)
- **Platform supports that can also be used for additional exercises:**
  Elevated push ups
  (Exercises the chest and triceps)
  Single or double calf raises
  (Exercises the calves)

VERTICAL ABDOMINAL KNEE RAISE station

DIP
station

TECHNICAL SPECIFICATIONS

Width: 44" / 112 cm
Height: 85" /216 cm
Length: 54" / 138 cm
Weight: 250 lbs / 115 kg

Anchoring Requirements: 4 x concrete anchors with rated "pull out" or "tension" strength of 3400lbs or greater. Anchors must be secured into structural concrete.

Frame & Finish: Constructed of 3/16" and 1/4" heavy duty steel that is zinc primed and polyester powder coasted with UV stabilized color pigment. All fasteners are tamperproof stainless steel carriage bolts with the locking nuts on the inside of the padlocked center columns.

Standard Color: Sand Brown.
Custom colors available for an extra charge.

Shipping Weight: 315 lbs / 142 kg

Shipping Dimensions: 48" wide x 48" long x 48" high / 122 cm wide x 122 cm long x 122 cm high

Number of Simultaneous Users: 2

CAD DRAWING

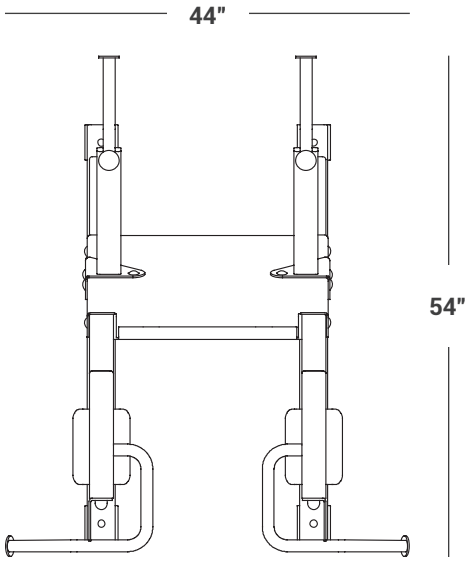

VULCAN
MULTIGYM

EVEREST
CARDIO CLIMBER

The Everest Cardio Climber is a tamperproof and weatherproof indoor/outdoor cardio fitness machine that provides a biomechanically correct cardio fitness workout.

The Quality of Commercial Gym Fitness Equipment

The EVEREST Cardio Climber takes the basics of indoor fitness equipment and delivers it to the outside world in a tamperproof, durable and weatherproof package.

Compact, cost effective and completely safe, the EVEREST is designed for any fitness level or ability.

TAMPERPROOF. WEATHERPROOF. SAFE.

CORRECT EXERCISE BIOMECHANICS

Unlike many outdoor cardio fitness machines, the EVEREST is designed with proper exercise bio-mechanics to ensure user safety and reduce the risk of injury.

The EVEREST fits almost any user ages 13+ with no adjustment needed.

CHOOSE YOUR OWN PACE

The EVEREST Cardio Climber mimics climbing a set of stairs in a continuous motion and allows the user to choose their own step height based on their individual fitness level.

The resistance and workout intensity is determined by the user's cadence and stroke range.

REAL EXERCISE VALUE

Continuously climbing stairs is one of the most intense and effective cardio vascular workouts someone can do.

With the EVEREST, users of all fitness levels will get an intense and effective cardio workout.

OUTDOOR-FIT exercise systems

1-877-760-6337 · info@outdoor-fit.com · www.outdoor-fit.com

The EVEREST Cardio Climber is built to maximize indoor or outdoor exercise areas.

RECOMMENDED TRAINING METHOD:
HIGH INTENSITY INTERVAL TRAINING (HIIT)

30 minute workout example. Scale time intervals & sets up or down depending on fitness level or workout time.

Start with 3-5-minute warm up at a slow & easy pace

30 seconds high intensity,
1 minute low intensity (repeat 4 times)

40 seconds high intensity,
1 minute low intensity (repeat 4 times)

30 seconds high intensity,
1 minute low intensity (repeat 4 times)

Finish with 3-5-minute cool down at slow & easy pace

TECHNICAL SPECIFICATIONS

Width: 30" / 77 cm
Height: 70" / 178 cm
Length: 46" / 117 cm
Weight: 280 lbs / 127 kg

Anchoring Requirements: 4 x concrete anchors with rated "pull out" or "tension" strength of 3400lbs or greater. Anchors must be secured into structural concrete.

Frame & Finish: Constructed of 3/16" and ¼" heavy duty steel that is zinc primed and polyester powder coated with UV stabilized color pigment. All fasteners are tamperproof stainless steel carriage bolts with the locking nuts on the inside of the padlocked center column.

Standard Color: Blue Hammertone.
Custom colors available for an extra charge.

Shipping Weight: 320 lbs / 145 kg

Shipping Dimensions: 48" wide x 72" long x 24" high / 122 cm wide x 183 cm long x 61 cm high

CAD DRAWING

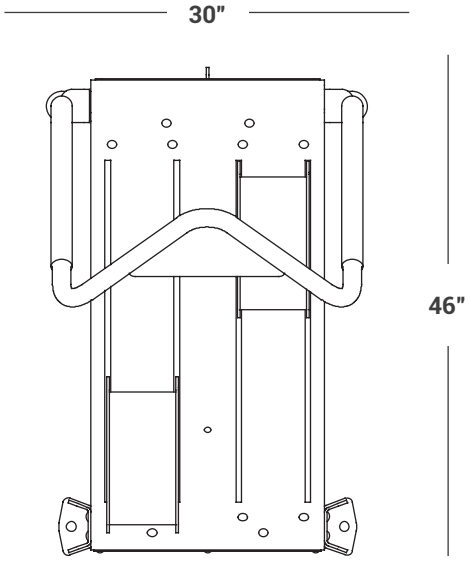

EVEREST
CARDIO CLIMBER

OUTDOOR FITNESS EQUIPMENT FOR PARKS & RECREATION

Not everyone cares about safety, durability and tamperproof design in their exercise equipment.

OUR CLIENTS DO.

At Outdoor-Fit, we design and build the world's safest outdoor fitness equipment. We provide rugged and tamperproof outdoor fitness equipment for real exercise, that's been designed with correct biomechanics in mind. All our equipment is completely weatherproof, and can handle anything mother nature throws at it.

We've developed a reputation for tough outdoor fitness equipment that provides real workouts to even the fittest of users. We also have innovative features, like our chin/dip assist mechanism, and adjustability to make our fitness equipment accessible to beginners and casual users. Our Apollo Helios, Titan, and Vulcan outdoor fitness multigyms and our revolutionary Everest Cardio Climber provide your community with access to fun, safe, and all-weather outdoor fitness equipment at a fraction of the cost of competitive products.

What makes our equipment tamperproof?

Only Outdoor-Fit uses completely tamperproof fasteners to bolt components together. We use rounded head stainless steel carriage bolts to attach our exercise stations to the main center column. The flanged nut for each carriage bolt is on the inside of the center column which is only accessible when the padlocked access hatch is removed. Our competitors only use tamper resistant fasteners and these are easily removed with the appropriate screwdriver.

What makes our equipment weatherproof?

To survive rain, sleet, and snow Outdoor-Fit uses the highest quality "super durable" polyester powder coating on the market. In fact, it's the same polyester powder coating used on marine buoys that are deployed in the Atlantic Ocean. In addition, the other exposed components are made from either rustproof stainless steel or aluminum.

What makes our equipment safe to use?

Outdoor-Fit has eliminated any pinch point or entrapment areas so that each user can exercise safely. In addition, our equipment has been tested and approved by the Dalhousie University Biodynamics, Ergonomics and Neuroscience Lab.

Why is our equipment the least expensive to install?

Each Outdoor-Fit multigym or cardio piece only requires a small floating concrete pad unlike our competitors who make single station exercise pieces that require larger concrete pads and/or multiple "frost depth" concrete footings. Installing single station pieces can get very expensive.

Why does our equipment deliver better exercise results for users?

The Outdoor-Fit product design team comes with extensive commercial fitness equipment experience. Each of our exercise stations mimics the exercise biomechanics found on top quality indoor commercial fitness equipment.

PARKS & RECREATION SHOWCASES

> We chose the Helios for its versatility, compact design and durable construction. The system is extremely durable, simple to install, and has received rave reviews by our citizens and park trail patrons! Our citizens will be able to use this equipment in support of a healthier lifestyle for many years to come.
>
> *-Midwest City Parks & Rec*

Installation locations across North America.

For an interactive map, go to our website and click on the "Installations" tab.

BIOMECHANICALLY CORRECT, TAMPERPROOF FITNESS EQUIPMENT

APOLLO MULTIGYM

HELIOS MULTIGYM

TITAN MULTIGYM

VULCAN MULTIGYM

EVEREST CARDIO CLIMBER

CONTACT US

OUTDOOR-FIT EXERCISE SYSTEMS

1-877-760-6337
info@outdoor-fit.com
www.outdoor-fit.com

PARK BOARD RECOMMENDATION – PRIORITY LIST– EXPENDITURE OF PARK DISCRETIONARY FUNDS FOR PARKS - 2021

Name	Address	Existing Play & Recreational. Features	Existing Tables-Benches-Other	Recommended Improvements	Estimated Cost of Improvements	Priority Ranking
ACTIVE PARKS						
Alder Park	279 Alder Ln N, Pacific, WA 98047	Undeveloped		None Recommended		12
Aspen Park	101 Aspen Ln N, Pacific, WA 98047 N 47 16.115 W 122 14.081	Swings	1 Table, 3 Red Benches	1 Tree for Inner Circle (Paulownia) 3 Trees for the arch (Quaking Aspen) Trash Can Dog Poop Bag Dispenser	Donated? 3 Aspen @ 38.98 = $116.94 (5 gal. pots)(Not Including prep & labor)	6
Beaver Park	550 Beaver Blvd, Pacific, WA 98047 N 47 15.603 W 122 15.524	Jungle Gym, Swings, Play Equipment	1 Table, 2 Benches	• New Sod • 3 Trees on south fence line • Trash Can • Irrigation	• Approx. 2,550 Sq. ft. = $2,700 (Not Including Site Prep & Labor) • 3 Leyland Cypress @ 41.46 = $124.38 (3 gal. pots) 3 Red-sunset Maple @ $46.00 = $136.00 (5.5 gal pot) (Not Including prep & labor)	4
Blueberry Park	117 5th Ave SW, Pacific, WA 98047 N 47 15.650 W 122 15.087		2 Tables, 1 Bench, 1 Garbage Can	See Comments for Milwaukee Park		1
Clint Steiger Memorial Park	117 5th Ave SW, Pacific, WA 98047 N 47 15.650 W 122 15.087	Baseball backstop, blacktop Helipad	Picnic Table OK Broken bench at Senior Center			10
City Park	600 3rd Ave SE Pacific WA 98047 N 47 15.853 W 122.14.196	Jungle Gym, Swings, BBQs, Baseball field, Stage, Bathrooms, Picnic Shelter	Benches	Expend No Funds Until Right Levee Improvement Impacts Determined		11
Elise Park	225 Elise LN Pacific WA 98047 N 47 16.111 W 122 15.255		1 Bench and 1 Picnic Table	Fence by Milwaukee Creek BBQ Tree Garbage Can		5
Milwaukee Park	522 Milwaukee Blvd SW, Pacific, WA 98047	1) Jungle Gym, Climbing Wall (fronting Milwaukee Blvd. S.)	1) 1 Bench, 1 Picnic Table (fronting	Place $30,000 aside for a Parks Master Plan around the Hanson/Beaver	$30,000	1

PARK BOARD RECOMMENDATION – PRIORITY LIST– EXPENDITURE OF PARK DISCRETIONARY FUNDS FOR PARKS - 2021

Name	Address	Existing Play & Recreational. Features	Existing Tables-Benches-Other	Recommended Improvements	Estimated Cost of Improvements	Priority Ranking
	N 47 15.607 W 122 15.029	2) Children's play equipment, frog spring seat (Behind Homes)	Milwaukee Blvd. S. 2) I Bench, 1 Picnic Table (Behind Homes)	Meadows PRD Wetland linking Milwaukee, Rhubarb, Blueberry and Strawberry Parks		
Otter Park	522 Milwaukee Blvd SW, Pacific, WA 98047 N 47 15.607 W 122 15.029	Jungle Gym, Swings	2 Benches under cover.	New Sod		7
Rhubarb Park	215 Rhubarb Ave SW, Pacific, WA 98047 N 47 15.614 W 122 15.311	Half Court Basketball Court, Children's Play Equipment	2 Benches by Basketball Court, 2 Benches by Children's Play Equipment, 3 Picnic Tables	See Comments for Milwaukee Park		1
Strawberry Park	132 Strawberry Ct, Pacific, WA 98047 N 47 15.569 W 122 15.105			See Comments for Milwaukee Park		1
Sunset Park	224 Sunset Dr, Pacific, WA 98047 N 47 15'55.57 W 122 14'39.43	Children's Play Equipment	2 Benches, 1 Picnic Table	Concrete Removal, Replace with rubberized path.		3
PASSIVE PARKS						
Butte Ave SE Property				No Improvements/funding		
Morgan Property	520 3rd Ave SW, Pacific, WA 98047			No Improvements/funding		
Tacoma Blvd. Property				No Improvements/funding		
West Hill Passive Park	520 3rd Ave SW, Pacific, WA 98047			No Improvements/funding		
OTHER RECREATION IMPROVEMENTS						

PARK BOARD RECOMMENDATION – PRIORITY LIST– EXPENDITURE OF PARK DISCRETIONARY FUNDS FOR PARKS - 2021

Name	Address	Existing Play & Recreational. Features	Existing Tables-Benches-Other	Recommended Improvements	Estimated Cost of Improvements	Priority Ranking
Interurban Trail – 3rd Ave. SW				• Flashing Lights for crosswalk • Way Finding Signage • Lighting		2
Interurban Trail – 5th Ave. SW				• Way Finding Signage • Lighting		2
Interurban Trail – County Line Rd				• Way Finding Signage • Lighting		2

WELCOME SPRING SALE!
Now through June 30th, save up to 40% off a new Burke playground and see how play can move your community.
Burke
PLAY THAT MOVES YOU
bciburke.com/sale
SAVE UP TO 40%
HURRY, ORDER BY JUNE 30TH!
GRADES K-6

SY-2948 SALE PRICE: $6,740*

Ages 2-5 | 22 Kid Capacity | 19' x 25' ASTM Use Zone

WELCOME SPRING SALE!
Save up to 40%

SY-3001 SALE PRICE: $6,966*

Ages 6-23 months | 25 Kid Capacity | 23' x 24' ASTM Use Zone

SY-2991 SALE PRICE: $7,667*

Ages 2-5 | 30 Kid Capacity | 29' x 25' ASTM Use Zone

SY-3003 SALE PRICE: $8,147*

6-23 months | 33 Kid Capacity | 30' x 21' ASTM Use Zone

**Specifications and pricing subject to change without notice. Sale only applies to the Welcome Spring Sale structures. No modifications or changes other than color. Pricing does not include taxes, installation, surfacing or freight. Must order by June 30th, 2021 and ship by September 30th, 2021. Not applicable with any other offer, discount or grant program. Offer only available to customers in the 48 contiguous United States. Contact your local Burke Representative for details.*

NUIN-2972 SALE PRICE: $10,774*
Ages 5-12 | 41 Kid Capacity | 41' x 39' ASTM Use Zone

WELCOME SPRING SALE!
Save up to 40%

NUIN-2995 SALE PRICE: $11,040*
Ages 2-5 | 37 Kid Capacity | 29' x 41' ASTM Use Zone

SY-2988 SALE PRICE: $12,847*

Ages 2-5 | 34 Kid Capacity | 33' x 29' ASTM Use Zone

SY-2992 SALE PRICE: $12,985*

Ages 2-5 | 40 Kid Capacity | 31' x 26' ASTM Use Zone

*Specifications and pricing subject to change without notice. Sale only applies to the Welcome Spring Sale structures. No modifications or changes other than color. Pricing does not include taxes, installation, surfacing or freight. Must order by June 30th, 2021 and ship by September 30th, 2021. Not applicable with any other offer, discount or grant program. Offer only available to customers in the 48 contiguous United States. Contact your local Burke Representative for details.

NU-2998 SALE PRICE: $19,399*

Ages 2-5 | 61 Kid Capacity | 31' x 29' ASTM Use Zone

SY-3007 SALE PRICE: $19,102*

Ages 5-12 | 54 Kid Capacity | 30' x 39' ASTM Use Zone

NU-2996 SALE PRICE: $20,995*

Ages 2-5 | 50 Kid Capacity | 39' x 33' ASTM Use Zone

WELCOME SPRING SALE!
Save up to 40%

IN-2920 SALE PRICE: $23,388*

Ages 2-5 | 32 Kid Capacity | 27' x 32' ASTM Use Zone

**Specifications and pricing subject to change without notice. Sale only applies to the Welcome Spring Sale structures. No modifications or changes other than color. Pricing does not include taxes, installation, surfacing or freight. Must order by June 30th, 2021 and ship by September 30th, 2021. Not applicable with any other offer, discount or grant program. Offer only available to customers in the 48 contiguous United States. Contact your local Burke Representative for details.*

SY-2989 SALE PRICE: $24,211*

Ages 2-5 | 63 Kid Capacity | 36' x 34' ASTM Use Zone

WELCOME SPRING SALE!
Save up to 40%

NUIN-2978 SALE PRICE: $24,500*

Ages 5-12 | 65 Kid Capacity | 39' x 44' ASTM Use Zone

NU-2975 SALE PRICE: $25,800*

Ages 5-12 | 68 Kid Capacity | 40' x 47' ASTM Use Zone

NU-2961 SALE PRICE: $26,748*

Ages 5-12 | 46 Kid Capacity | 35' x 35' ASTM Use Zone

**Specifications and pricing subject to change without notice. Sale only applies to the Welcome Spring Sale structures. No modifications or changes other than color. Pricing does not include taxes, installation, surfacing or freight. Must order by June 30th, 2021 and ship by September 30th, 2021. Not applicable with any other offer, discount or grant program. Offer only available to customers in the 48 contiguous United States. Contact your local Burke Representative for details.*

NUIN-2960 SALE PRICE: $28,810*
Ages 5-12 | 92 Kid Capacity | 54' x 41' ASTM Use Zone

WELCOME SPRING SALE!
Save up to 40%

NU-2966 SALE PRICE: $37,405*
Ages 5-12 | 60 Kid Capacity | 41' x 29' ASTM Use Zone

NU-2962 SALE PRICE: $39,835*

Ages 5-12 | 75 Kid Capacity | 48' x 34' ASTM Use Zone

NUNP-2986 SALE PRICE: $54,799*

Ages 5-12 | 103 Kid Capacity | 52' x 52' ASTM Use Zone

**Specifications and pricing subject to change without notice. Sale only applies to the Welcome Spring Sale structures. No modifications or changes other than color. Pricing does not include taxes, installation, surfacing or freight. Must order by June 30th, 2021 and ship by September 30th, 2021. Not applicable with any other offer, discount or grant program. Offer only available to customers in the 48 contiguous United States. Contact your local Burke Representative for details.*

Buell Recreation

7327 SW Barnes Road #601
Portland, Oregon 97225
800.266.1250 • buellrecreation.com

PRSRT STD
US POSTAGE PAID
FOND DU LAC WI
PERMIT NO 549

********AUTO**ALL FOR AADC 980
MR JAMES MORGAN
CITY ENGINEER
CITY OF PACIFIC
100 3RD AVE SE
PACIFIC WA 98047-1399

41
980
37095

004

RECEIVED
APR 29 2021
CITY OF PACIFIC
FINANCE DEPARTMENT

SAVE UP TO 40%

Must order by June 30th, 2021

**Specifications and pricing subject to change without notice. Sale only applies to the Welcome Spring Sale play structures. No changes or modifications permitted. Pricing does not include taxes, installation, surfacing or freight. Must order by June 30th, 2021 and ship by September 30th, 2021. Not applicable with any other offer, discount or grant program. Offer only available to customers in the 48 contiguous United States. Contact Buell Recreation for details.*

Order using one of Burke's Cooperative Purchasing Contracts!

equalis GROUP
OMNIA PARTNERS
Sourcewell Awarded Contract
Contract #010521-BUR

IN-2976 SALE PRICE: $18,494* | Ages 5-12 | 75 Kid Capacity | 39' x 40' ASTM Use Zone

Trademark(s) are the property of BCI Burke Company. © BCI Burke Company 2021. All Rights Reserved.

Burke PLAY THAT MOVES YOU.

PIANO HARP

KISSING GATE

PB 4/20/2021